HIGH SPEED 3-IN-1 POWER CASE TRIMMER
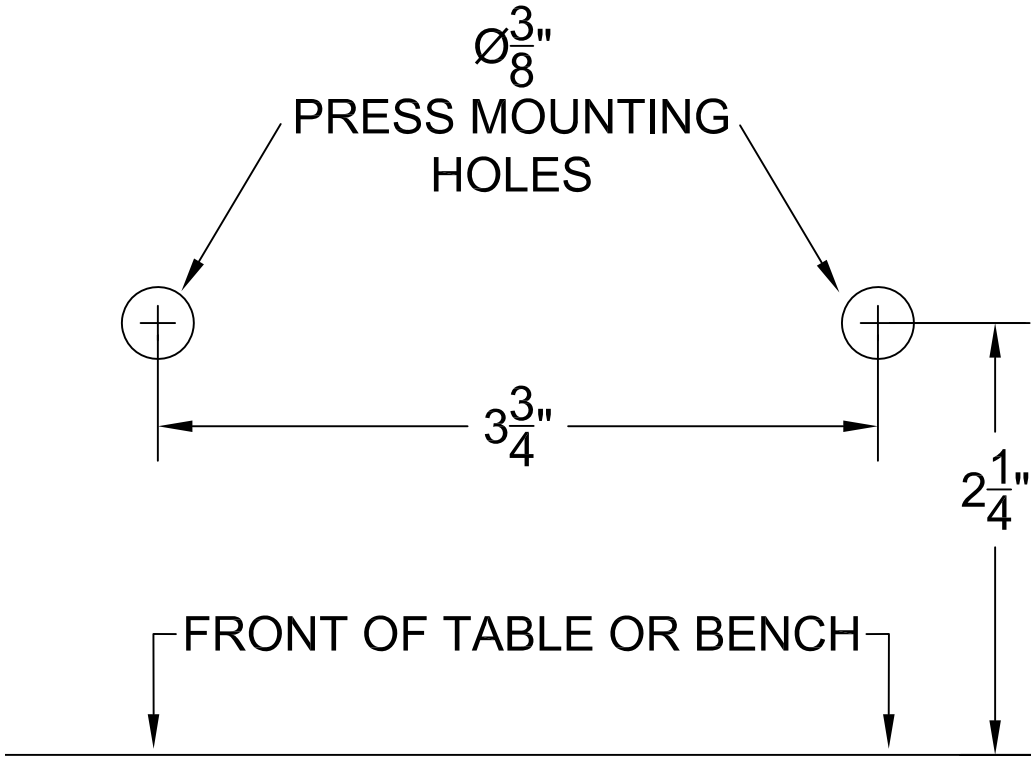
MOUNTING TEMPLATE